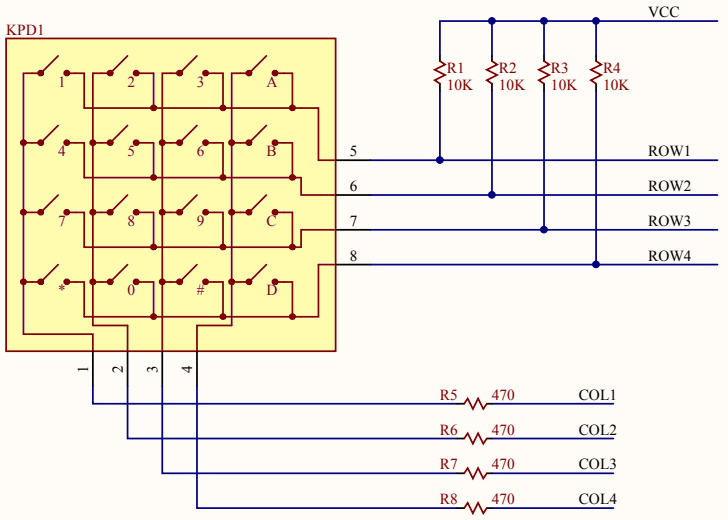

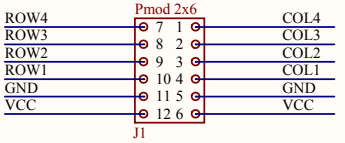

Foot F1

Foot F2

Foot F3

Foot F4

Digilent Inc. | Chinese ROHS | ROHS

Title	PmodKYPD
Rev	B.0
Copyright	
Circuit	
Doc#	500-195
Engineer	NEA
Author	CLG/GMA
Date	12/01/2010
Sheet#	01 out of 01

DIGILENT BEYOND THEORY